paco jaansōn

DAYTONA

Standard Wall Hung Pan White
Product Code: PACO-137

Dimensions
560mm (w) x 365mm (d) x 345mm (h)

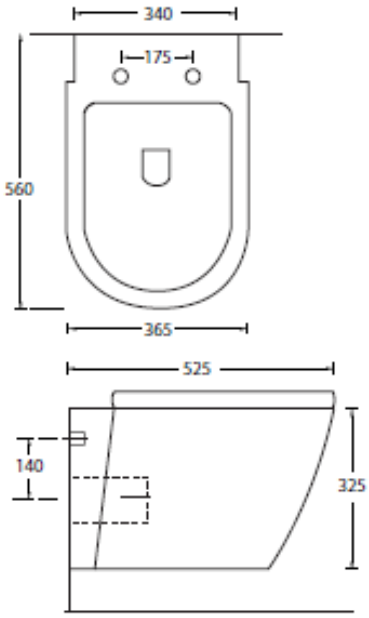

DESCRIPTION

When minimalism is a must, Daytona is always first over the line. Its streamlined pan is perfect for the modern pace of everyday living.

Each material has it's own language , the final result determined by the connection between form and concept. Quality and comfort.

Elegant, spotless, and graceful, Daytona's shape is as pleasing to look at, as it is easy to clean. The pan and adjacent space are contained within a design marked by soft curves.

Features
Suitable with Concealed Cistern
P-Trap
4 Star - Wels 4.5/3 Litres
Soft Close Seat
Made from Vitreous China

ACS

1300 898 889 www.acsbathrooms.com.au

As part of ACS commitment to quality products. Information provided in this data sheet is representative of the actual productt aavailable at the time of printing. Due to our commitment to continuous product design and development, the designs and specifications depicted are subject to change withoutt notice. Please confirm all particulars with your ACS sales consultant prior to purchase. Each product is covered by a limited warranty. Please see our website for full terms and conditions. This drawing remains the property of ACS and should not be copied or distributed without ACS consent. © 2010 All Dimensions are approximate in mm and are not to scale.