ikon

acl COMPANY PTY LTD

15 YEAR WARRANTY

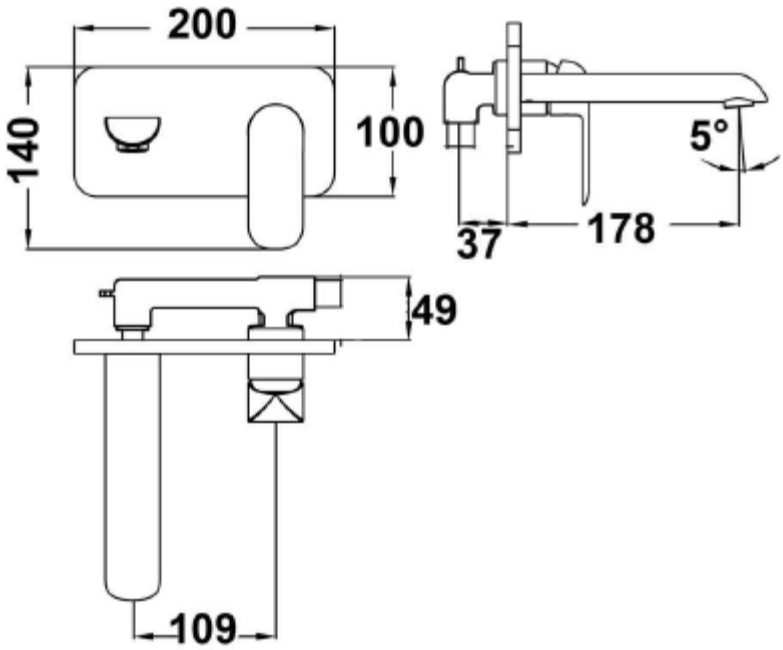

WATER RATING
5.0

- IKON-12 IKON KARA Wall Basin Mixer with Spout Chrome Finish
- IKON-12MB IKON KARA Wall Mixer with Spout Matt Black Finish
- IKON-12BG IKON KARA Wall Mixer with Spout Black & Rose Gold Finish

WORKING PRESSURES: 150-500kpa
OPERATING TEMPERATURE: 1°C to 70°C
WELS: 5 STAR 5.0L PER MIN
CARTRIDGE TYPE: Kerox 35mm Cartridge
AERATOR: Neoperl

WARRANTY:
15 year Ceramic disk cartridges-parts only
Note: Excludes damage to ceramic disk cartridges from pieces of copper tube, plastic tube, sand, dirt or thread tape etc.
7 year replacement products or parts
1 year replacement products or parts and labour

ACS

1300 898 889 www.acsbathrooms.com.au

As part of ACS commitment to quality products. Information provided in this data sheet is representative of the actual productt aavailable at the time of printing. Due to our commitment to continuous product design and development, the designs and specifications depicted are subject to change withoutt notice. Please confirm all particulars with your ACS sales consultant prior to purchase. Each product is covered by a limited warranty. Please see our website for full terms and conditions. This drawing remains the property of ACS and should not be copied or distributed without ACS consent. © 2010 All Dimensions are approximate in mm and are not to scale.